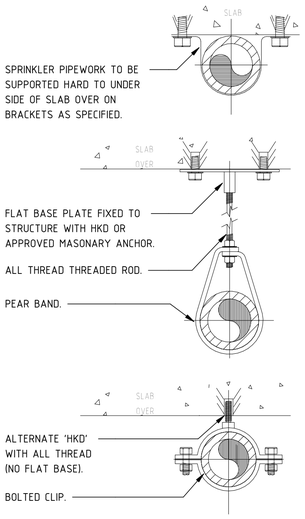

PIPEWORK HANGER DETAILS
NOT TO SCALE

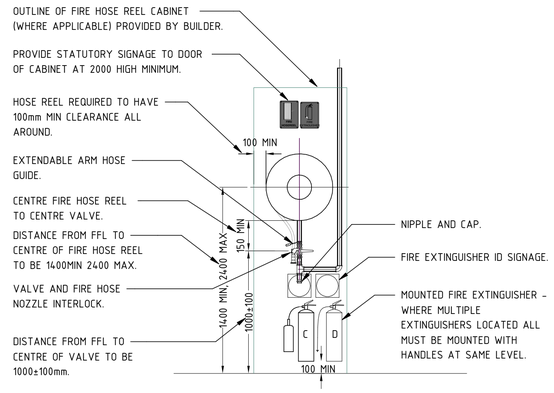

FIRE HOSE REEL DETAIL
NOT TO SCALE

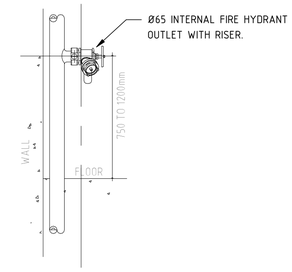

INTERNAL FIRE HYDRANT RISER DETAIL
NOT TO SCALE

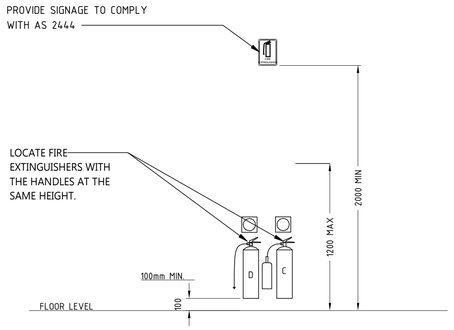

PORTABLE FIRE EXTINGUISHER DETAIL
NOT TO SCALE

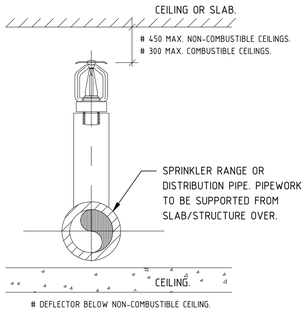

CONCEALED UPRIGHT SPRINKLER HEAD DETAIL
NOT TO SCALE

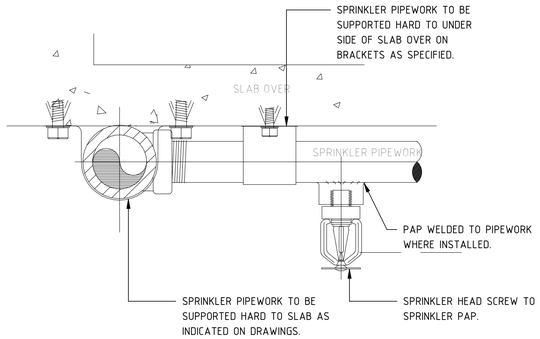

EXPOSED SPRINKLER HEAD DETAIL
NOT TO SCALE

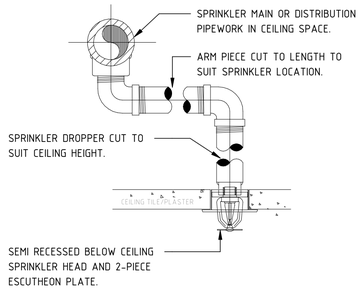

SEMI RECESSED SPRINKLER HEAD DETAIL
NOT TO SCALE

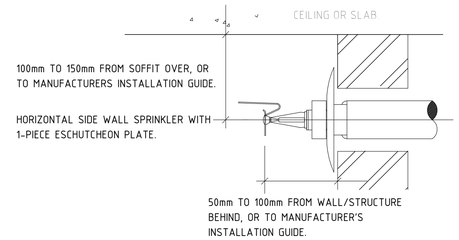

SIDE WALL SPRINKLER HEAD DETAIL
NOT TO SCALE

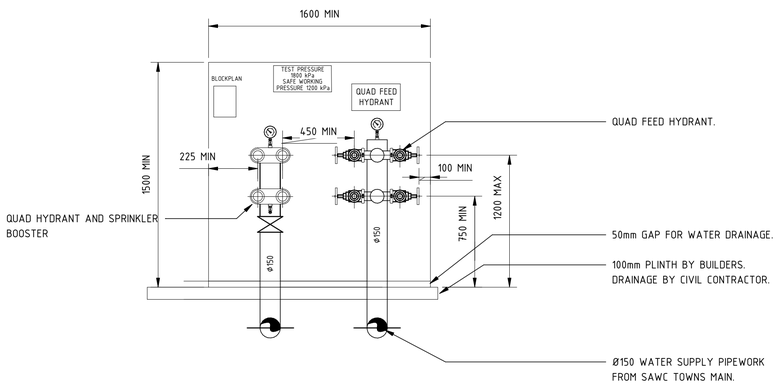

FIRE BRIGADE BOOSTER ASSEMBLY DETAIL
NOT TO SCALE

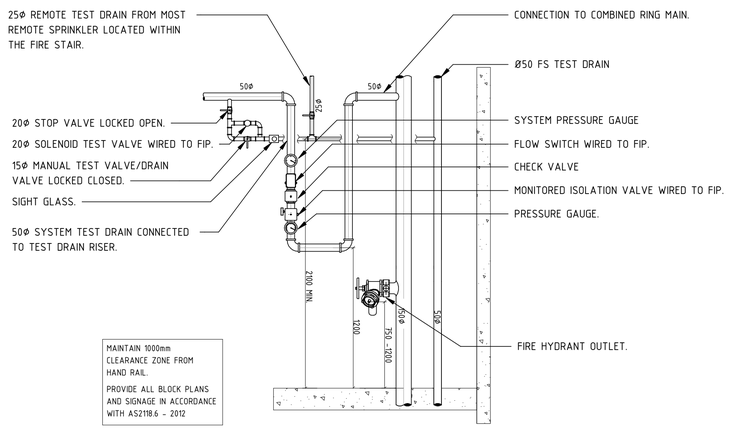

MAINTAIN 1000mm CLEARANCE ZONE FROM HAND RAIL.

PROVIDE ALL BLOCK PLANS AND SIGNAGE IN ACCORDANCE WITH AS2118.6 - 2012

TYPICAL FIRE HYDRANT AND RESIDENTIAL SPRINKLER CONTROL VALVE ASSEMBLY DETAIL
NOT TO SCALE - FOR INFORMATION ONLY

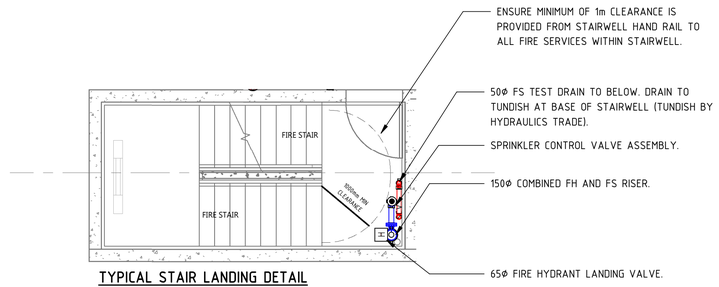

TYPICAL STAIR LANDING DETAIL
SCALE 1:50

REV'N	DESCRIPTION	DATE	CHK'D
T1	TENDER ISSUE	23.05.19	MM

TENDER ISSUE

1 0.5 0 0.5 1 2 3 4 5 m
SCALEBAR 1:100

CITIFY bfc GEMMA LEA DESIGN STUDIO

LUCID CONSULTING AUSTRALIA
Level 3/169, Pirie St Adelaide SA 5000
Phone: (08) 8407 9700
Email: adelaide@lucidconsulting.com.au

PROJECT
HYDE PARK PLACE
248 UNLEY ROAD, HYDE PARK
FIRE SERVICES

DRAWING
TYPICAL DETAILS

NOT FOR CONSTRUCTION PURPOSES UNLESS STAMPED FOR CONSTRUCTION. VERIFY DIMENSIONS AND LEVELS ON SITE BEFORE SETTING OUT. DO NOT SCALE. REFER TO FIGURED DIMENSIONS - IN mm UNLESS OTHERWISE STATED.

Scale	Design: LM/AR	No. in Set	Date
AS SHOWN	Drawn: SHA Review: MM	12 of 14	MAY 2019
Orig. Size	Drawing no.		Revision
A1	LCE14462-F300		T1

© Copyright Lucid Consulting Australia 5/23/2019 12:51:33 PM